# DIN rail mounting type switching mode power supply

## ■ Features

- Compact size, high quality, cost-effective
- Universal input power
- Enables to drive various controllers
- Built-in overcurrent protection circuit
- DIN rail mounting and mountable without the rail

⚠ **Please read "Caution for your safety" in operation manual before using.**

## ■ Ordering information

**SP — 03 24**

Output voltage

| | |
|---|---|
| 05 | 5VDC |
| 12 | 12VDC |
| 24 | 24VDC |

Output power

| | |
|---|---|
| 03 | 3W |

Item

| | |
|---|---|
| SP | Switching Mode Power Supply |

## ■ Specifications

| Model | | SP-0305 | SP-0312 | SP-0324 |
|---|---|---|---|---|
| Output power | | 3W | | |
| Input | Power supply | 100-240VAC(85-264VAC) | | |
| | Frequency | 50/60Hz | | |
| | Current consumption | Max. 0.15A | | |
| | Efficiency | 67 to 74% | | |
| Output | Voltage | 5VDC | 12VDC | 24VDC |
| | Current | 0.6A | 0.25A | 0.13A |
| | Allowable voltage range | Max. ±5% | | |
| | Ripple | Max. 5% | | |
| | Voltage fluctuation ratio | Max. 0.5%(at 85-264VAC 100% Load) | | |
| | Overcurrent protection | Min. 110% | | |
| Series / Parallel operation | | Not available | | |
| Output indicator | | Red LED | | |
| Insulation resistance | | 100MΩ(at 500VDC megger) | | |
| Dielectric strength | | 2000VAC 50/60Hz for 1 minute | | |
| Vibration | | 0.75mm amplitude at frequency of 10 to 55Hz(for 1 min.) in each of X, Y, Z directions for 2 hours | | |
| Shock | | 300m/s² (approx. 30G) in each of X, Y, Z directions for 3 times | | |
| Environ-ment | Ambient temperature | -10 to 50℃, storage : -20 to 70℃ | | |
| | Ambient humidity | 35 to 85%RH | | |
| Unit weight | | Approx. 100g | | |

※Environment resistance is rated at no freezing of condensation.

# DIN rail Mounting Type Switching Mode Power Supply

## ■ Output feature data

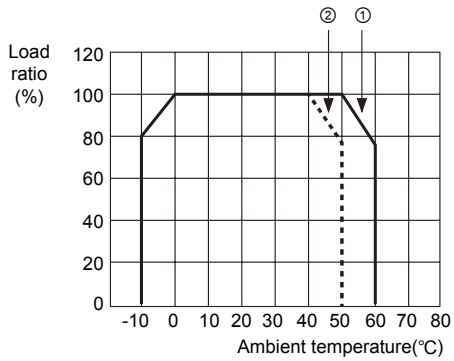


<Output feature for the ambient temperature influence >

- Be sure when installing as the efficiency is decreased by ambient temperature.
- Refer to output feature beside when installing as the efficiency is affected by mounting status.

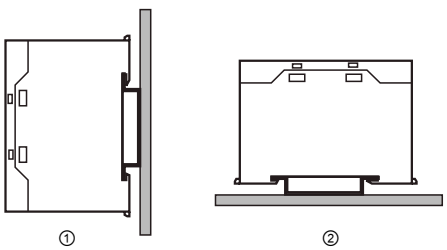


## ■ Feature data of overcurrent protection

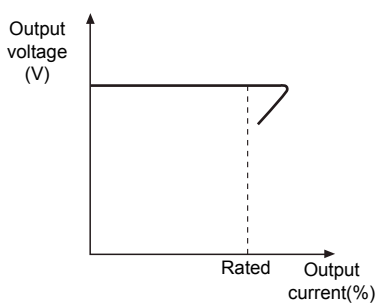


- It is able to protect overcurrent by load with built in overcurrent protection circuit. When the over rated current is flowed, the circuit is operated(output voltage is fallen) and it is released when the load current is under the rated current(it is returned to the rated output voltage).

## ■ Block diagram

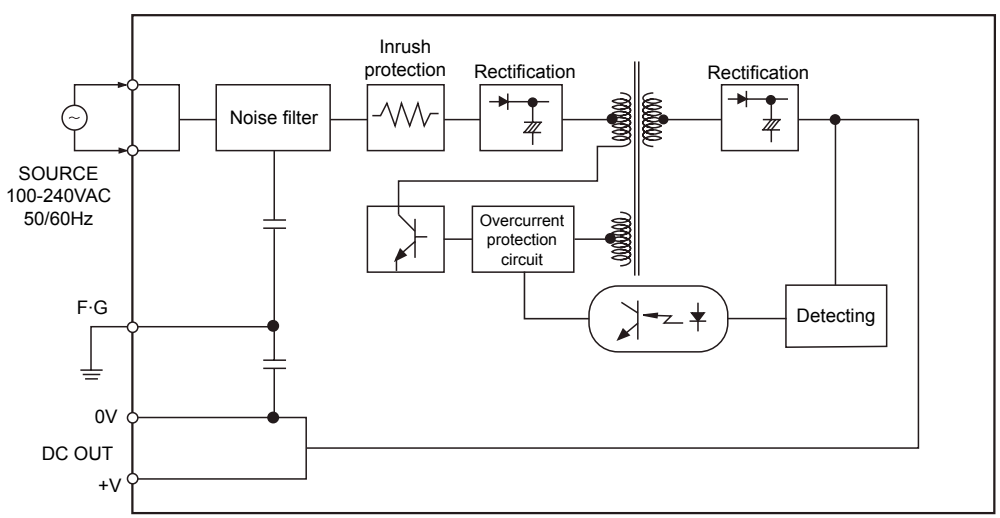

## ■ Dimensions

(unit: mm)

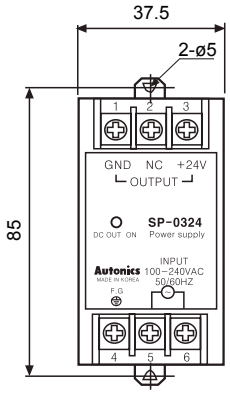


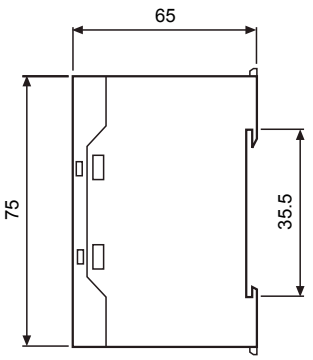


## ■ Front part identification

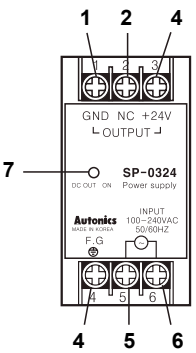


**1. GND**

**2. N·C terminal**

**3. +V**

**–** / **+** **DC OUTPUT terminal (5VDC, 12VDC, 24VDC)**

**4. F.G. (Field Ground) terminal**

**5.**

**6.**

**SOURCE 100-240VAC 50/60Hz**

**7. Output indicator-DC output is ON, then LED ON**

## ■ Rail mounting method

### ◎ Mounting on DIN rail and removing

**● To mount the power supply on DIN rail**

First put the power supply on the part ⓐ of the rail and then press it for the direction ⓑ.

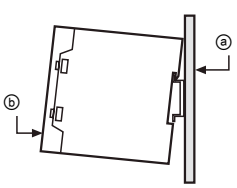


**● To remove the power supply from DIN rail**

Firstly put a screw driver into the part ⓒ and push it downward.

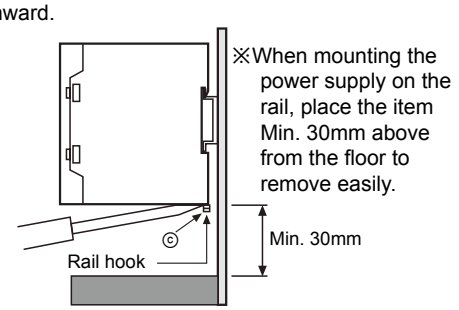


### ◎ Mounting on Panel

**● When there is no DIN rail,**

If there is no rail, it is able to mount by screwing a bolt at the hook on the body as following figure.

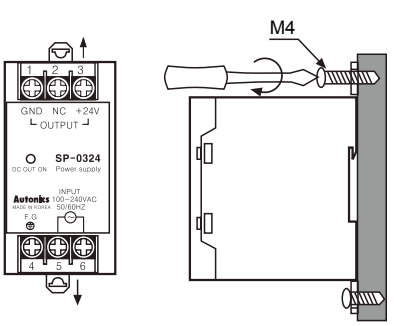

# DIN rail Mounting Type Switching Mode Power Supply

## ▣ Proper usage

### ◎ Serial and parallel operation

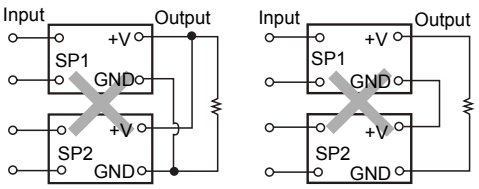


[Parallel connection] [Serial connection]

※The power supply should not be used in serial and parallel connection in any case.
Please use it individually always.

### ◎ Caution for mounting

● Please install it at ventilating place in order to dissipate the heat effectively then it is able to improve the reliability for a long time.

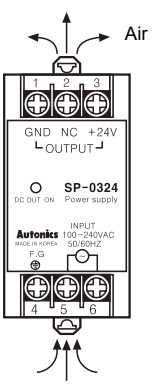


● When installing two or more power supplies side by side, please keep the interval at least 10mm so that the heat is dissipated effectively.

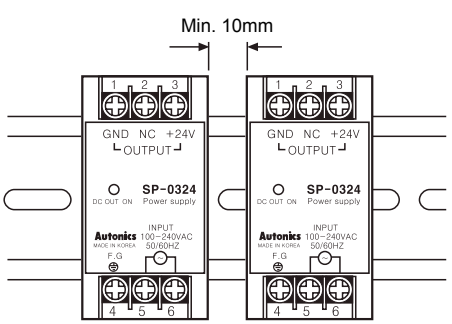


### ◎ Caution for using

● Please wire input power(AC) to the input power terminal properly. If wiring it to other terminal the inner circuit will be broken.

● It is working with 2000VAC between the terminal and case for a minute, but it will be broken if the overvoltage is supplied for several minutes.

● The power supply has 100MΩ of insulation resistance between the terminal and case.
Please use a D.C insulation tester with 500VDC for the insulation resistance of the power supply.

● Please check as below when problem is happened.
① Short of DC output terminal.
(When overcurrent is supplied the overcurrent protection circuit is operated and when the load current is under the rated current it is stopped.)
② Wiring of AC input and DC output terminal properly.
③ AC input voltage in rated voltage.