MRI 58A
MRI 58B

RusAutomation

Magnetic Incremental Encoder

- 58 mm case diameter
- Magnetic incremental rotary encoder
- 4 - 8 - 16 - 25 - 32 - 40 - 50 - 64 - 80 - 100 - 125, 128 - 160 - 200 - 250 - 256 - 400 - 500 - 512 ppr.
- Very useful for outdoor applications

MRI A
Clamping flange

MRI B
Synchro flange

Technical Specifications

Type of Measurement	Magnetic incremental non-contact
Resolution	4 ... 512 ppr.
Output Channels	A,B,Z or A,$\bar{A}$, B,$\bar{B}$, Z,$\bar{Z}$
Output Type	Push-Pull, TTL Linedriver, HTL Linedriver
Supply Voltage	5 VDC, 8 - 24 VDC, 5 - 24 VDC
Power Comsumption	< 40 mA (24 VDC)
Electrical Connections	2.5 m cable (standard)
Max. Permissible Shaft Loading Radial Axial	60 N 40 N
Max. Speed	3500 rpm
Shaft Diameter	Ø6 - 8 - 10 mm
Shaft Material	Stainless steel
Case Diameter	Ø58 mm
Case Material	Aluminium / Steel
IP Degree	IP 54
Operating Temperature	-20°C ... +80°C
Storage Temperature	-30°C ... +90°C

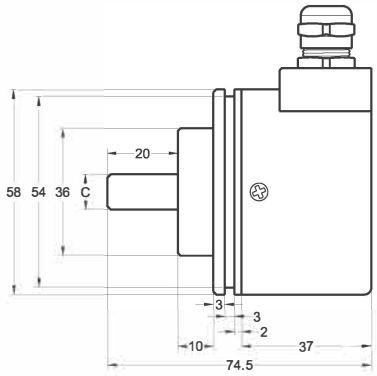

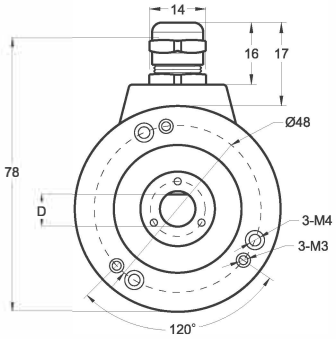

A Type (Clamping flange)

Push-Pull Cable Output

+V : Brown
0V : White
GND : Shield
Ch A : Yellow
Ch B : Green
Ch Z : Gray

TTL - HTL Linedriver Cable Output

+V : Brown
0V : White
GND : Shield
Ch A : Yellow
Ch B : Green
Ch Z : Gray
Ch A inv. : Blue
Ch B inv. : Red
Ch Z inv. : Pink

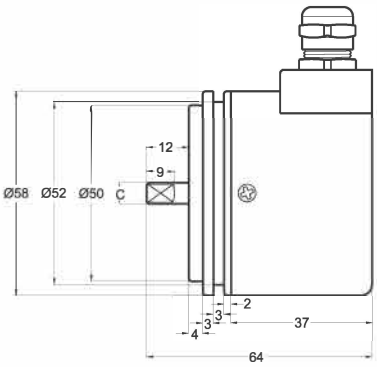

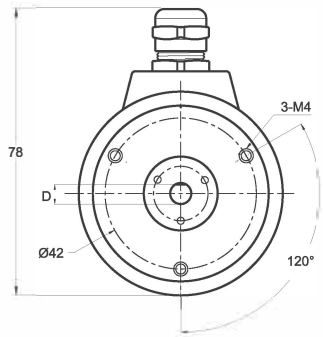

B Type (Synchro Flange)

PRI 58	AR (shaft)		BR (shaft)	
	C	D	C	D
	Ø6 mm	5 mm	Ø6 mm	5 mm
	Ø8 mm	7 mm	Ø8 mm	7 mm
	Ø10 mm	9 mm	Ø10 mm	9 mm

Model	Case Diameter	Case Type	Shaft Diameter	Output	Resolution	Output Channels	Supply Voltage	Connector / Cable	Cable Output
(example) MRI	58	A	R8	HLD	512	ZZ	V2	2M5	R
MRI	58mm	A : Clamping flange AW: Water proof B : Synchro flange BW: Water proof	R6 : 6 mm R8 : 8mm R10: 10 mm	LTP : Push-Pull LD : TTL Linedriver HLD: HTL Linedriver	4 ... 512 ppr.	Z : A, B Z ZZ: A$\bar{A}$, B$\bar{B}$, Z$\bar{Z}$	V1: 5 VDC V2: 8-24 VDC	2M5: 2, 5meter cable 5M : 5 meter cable 8M : 8 meter cable 10M: 10 meter cable	R: Radial A: Axial

OP.D.ENG.V1-23220

ООО “РусАвтоматизация”

454010 Россия, Челябинск, Гагарина 5, тел. 8-800-775-09-57 (звонок бесплатный), +7(351)799-54-26, тел./факс +7(351)211-64-57, info@rusautomation.ru, www.rusautomation.ru, русавтоматизация.рф