DIN W72×H36mm Simple Operation Type

■ Features

- Simple operation type
- ON/OFF and proportional control
- Input correction, offset correction, manual reset, cooling/heating operation functions
- PV deviation indicator

⚠ Please read "Caution for your safety" in operation manual before using.

■ Ordering Information

TC 3 Y T — B 4 R 3

Relay capacity	3	250VAC 3A 1c
	16	250VAC 16A 1c
Control output	R	Relay output
Power supply	4	100-240VAC 50/60Hz
Control mode	B	ON/OFF and proportional control(common use)
Setting type	T	Touch S/W single setting type
Size	Y	DIN W72×H36mm
Digit	3	999(3digit)
Item	TC	Temperature Controller

■ Specifications

Model		TC3YT-B4R3	TC3YT-B4R16
Power supply		100-240VAC 50/60Hz	
Allowable voltage range		90 to 110% of rated voltage	
Power consumption		Approx. 4VA	
Display method		7Segment Red LED Display [Deviation "■" signal(Green), unit display(Yellow)]	
Character size		W7.4 × H15mm	
Input type※1		TC:K(CA), J(IC), RTD: DPt100Ω(DIN)	
Control output		Relay output 250VAC 3A 1c	Relay output 250VAC 16A 1c
Control method		ON/OFF and proportional control (common use)	
Hysteresis		1 to 100℃	
Proportional band		0 to 100%	
Offset correction		0 to 100%	
Control period		1 to 120sec	
Display method		±1digit with a bigger one of ±0.5% of PV or ±1℃	
Setting type		Setting by front push buttons	
Sampling period		500ms	
Dielectric strength		2000VAC 60Hz for 1 minute(between external terminal and case)	
Vibration		0.75mm amplitude at frequency of 10 to 55Hz in each of X, Y, Z directions for 1 hour	
Relay life cycle	Mechanical	Min.10,000,000 operations	
	Malfunction	Min.100,000 operations(250VAC 3A resistive load)	Min.100,000 operations(250VAC 16A resistive load)
Insulation resistance		Min. 100MΩ(at 500VDC megger)	
Noise strength		±2kV R-phase and S-phase (pulse width: 1μs)	
Memory retention		Approx. 10 years (When using non-volatile semiconductor memory type)	
Environ-ment	Ambient temperature	-10 to 50℃, storage: -20 to 60℃	
	Ambient humidity	35 to 85%RH	
Protection		IP65	
Approval		c UL us	
Unit weight		Approx. 99g	Approx. 103g

※1: NTC sensor input is optional.
※Environment resistance is rated at no freezing or condensation.

TC3YT

■ Connections

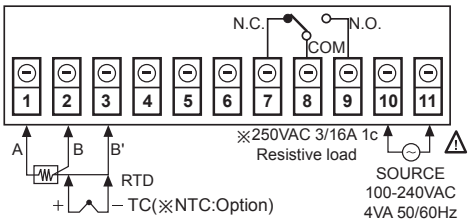

※TC3YT-B4R3 : 250VAC 3A
TC3YT-B4R16 : 250VAC 16A

■ Dimensions

(unit: mm)

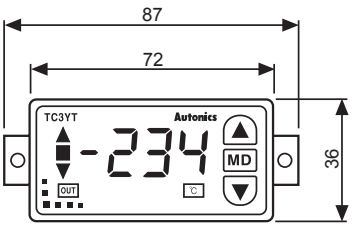

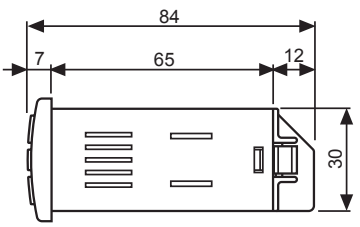

●Panel cut-out

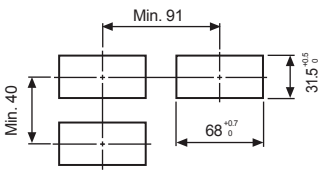

■ Unit Description

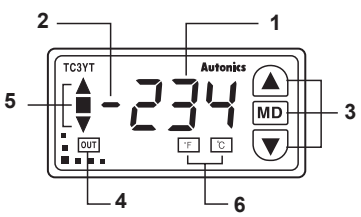

1. **PV(Process value) display(Red)**
2. **Minus display(Red)**
3. **Controlling a set value(MD, UP, DOWN)**
4. **Display an operation of control output(Red)**
5. **Display a deviation between PV(Process value) and SV(Set value) : ▲, ▼(Red) / ■(Green)**
6. **PV(Process value) ℃/℉ unit display(Yellow)**

■ Input Type And Range

Input sensor		Display	Temperature range (℃)	Temperature range (℉)
Thermocuople	K	ECA	0 to 999	32 to 999
	J	JI C	0 to 400	32 to 752
RTD	DPt H	PE.H	0 to 400	32 to 752
	DPt H	PE.L	-99.9 to 199.9	-146 to 390

※A temperature sensor converts temperature into electrical signal so that a controller can do ON/OFF the control output.
※The setting is available with the using range.
※The setting range of the SV is limited within the using temperature range.
※Using temperature : It can be set as ℃, ℉ are displayed on the front side.

■ Display For Power ON

For power ON, it displays current temperature after temperature sensor and the type of control output flashes twice(every 1 sec). In case of error, Error signal flashes instead of current temperature.

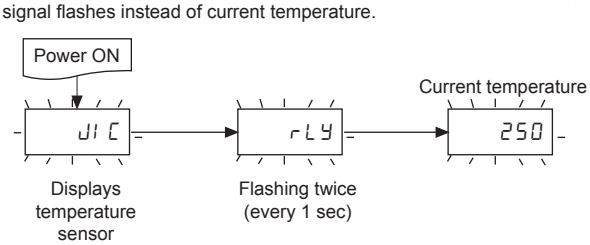

Autonics

■ Checking And Setting SV

- SV can be checked and set on operation mode.
- Press MD key on operation mode.

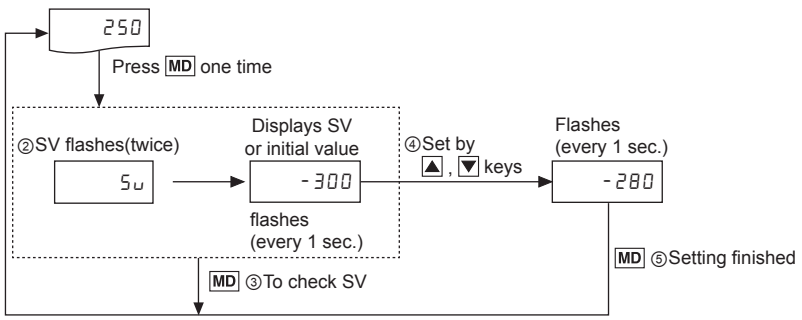

①PV is displayed on operation mode,
②Press MD key, the SV is indicated after "Su" is flashing 2 times.
③In case of checking the SV only, after check it pressing MD key, then it returned to the drive mode.
④In case of changing and setting the SV, set it with ▲, ▼ keys. If you press ▲, ▼ keys continuously, the SV is increased/decreased with high-speed.
⑤If press MD key after setting, the set value is saved and the mode returns to operation.
※**When there is no input for 1 min. for setting operation, it returns to operation mode and the parameter set value is not changed the prior value is saved.**

■ Parameter 1 Group

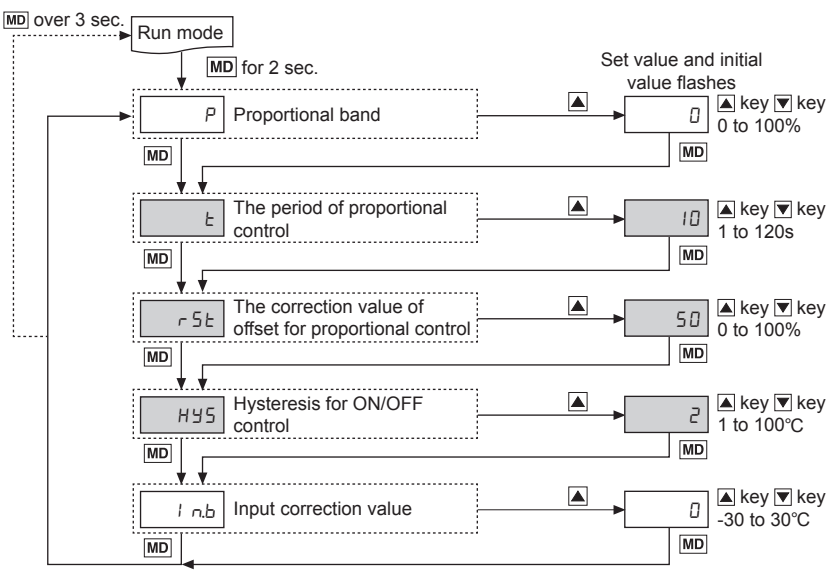

- In operation mode, if press MD key for 2 sec., it enters setting group 1.
  At the beginning of MD key input, Su signal is displayed. And then P signal, the first mode of group 1 is displayed for 2 to 3 sec. It enters the first mode of group 1 for finishing press MD.
- Parameter will be displayed when entering setting mode.
- Press MD key one time, parameter move to the next. Moreover for changing a set value, press ▲ key. (Set value is flashing every one sec.)
- Press a MD key after changing a set value or for the statue of setting change, the setting value is saved and the parameter is changed to the next.
- In any moment during the setting operation, if press MD key for 3 sec., the changed value is saved and the mode is changed to operation mode.
- When there is no input for 1 min. for setting operation, it returns to operation mode and the parameter set value is not changed the prior value is saved.
- When P is not "0", [HYS] parameter is not displayed.
- When P is "0", ON/OFF control, [t] and [rSt] parameter is not displayed.

※When it is entered to the setting mode for all cases, applicable parameters will be displayed.

■ Parameter 2 Group

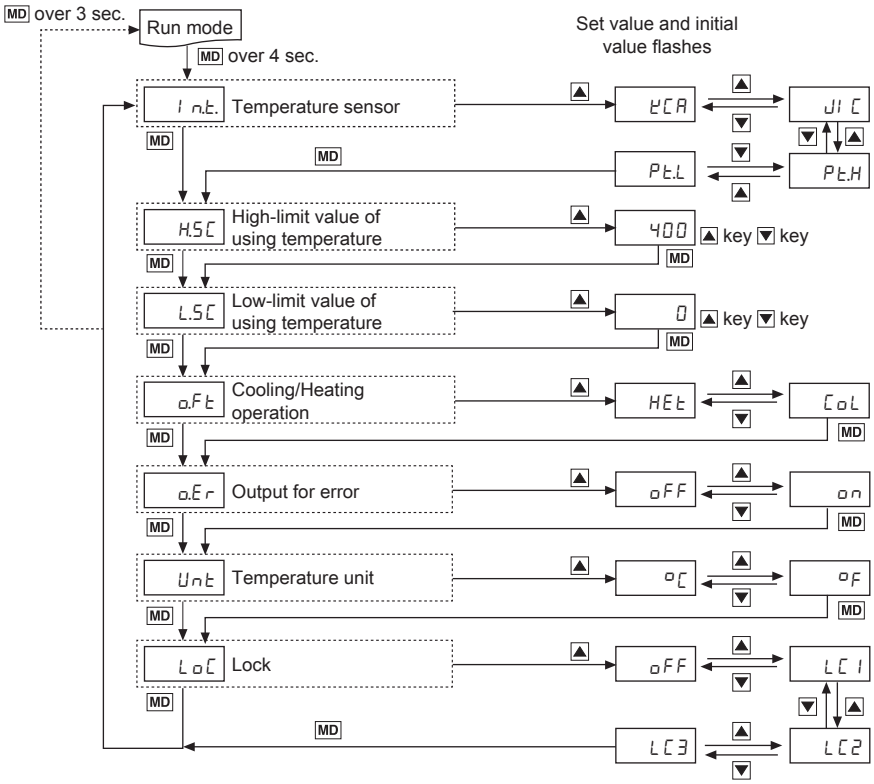

- In operation mode, if press MD key for 4 sec., it enters setting group 2.
  At the beginning of MD key input, Su signal is displayed. And then P signal, the first mode of group 1, is displayed for 2 to 3 sec. for the moment of 4 sec past, In.t, the first mode of setting group 2, is displayed. It enters the first mode of group 2 for finishing press MD key.
- Parameter will be displayed when entering setting mode.
- Press MD key one time, parameter move to the next. Moreover for changing a set value, press ▲ key. (Set value is flashing every 1 sec.)
- Press a MD key after changing a set value or for the statue of setting change, the setting value is saved and the parameter is changed to the next.
- In any moment during the setting operation, if press MD key for 3 sec., the changed value is saved and the mode is changed to operation mode.
- When there is no input for 1 min. for setting operation, it returns to operation mode and the parameter set value is not changed the prior value is saved.

※When it is entered to the setting mode for all cases, applicable parameters are displayed.
※When the unit of the using temperature is changed, the SV is changed as 0℃.

■ Factory Default

● Parameter 1 group

Parameter	Description	Setting range	Unit	Factory default
P	Proportional band	0 to 100	%	0
t	The period of proportional control	1 to 120	sec	10
rSt	The correction value of offset forproportional control	0 to 100	%	50
HYS	Hysteresis for ON/OFF control	2 to 100	℃	2
In.b	Input correction value	-30 to 30	℃	0

● Parameter 2 group

Parameter	Description	Setting range	Unit	Factory default
In.t	Temperature sensor	K.TC, J.TC, Pt.H, Pt.L	-	J.TC
H.SC	High-limit value of using temperature	Refer "▣ Input specifications and range."	℃	400
L.SC	Low-limit value of using temperature		℃	0
o.Ft	Cooling/Heating operation	HEt ◄► CoL	-	HEt
o.Er	Output for error	on ◄► oFF	-	oFF
Unt	Temperature unit	°C ◄► °F	-	°C
LoC	Lock	oFF, LC1, LC2, LC3	-	oFF

▣ Functions

◎ Input correction [i n.b]

- Input revise corrects the deviation, occurred from temperature sensor such as thermocouples, RTD, Analogue sensor etc.
- There are grades for temperature sensor and high accuracy one is a high price, normal products are usually used. Check the deviation of every thermo sensor precisely to measure temperature accurately.
- Use this mode after measuring deviation occurred from temperature sensor exactly because if measured deviation value is not correct, displayed temperature will be too high or too low.
- Setting range : -49 to 50℃(Factory default : 0℃)
  E.g.)When even though current temperature is 80℃, display value is 78℃, input correction value should be 2 to display 80℃.

◎ Hysteresis [HYS]

- In the ON/OFF control, the ON/OFF interval of the output is required, this interval is hysteresis. When this interval is too narrow, it causes hunting such as chattering by external noise.
- For ON/OFF control, even when control is stable, there is hunting.
  Because the hunting is generated by combined cause, HYS set value, response spec, sensor position, etc., it is not regular. To minimize it, proper HYS value, the capacity and characteristic of heater, and response and position of sensor need to be considered.
- Setting range : 1 to 100℃(Factory default : 2℃)

◎ Proportional band[P]

- If current temperature(PV) is within the proportional control, it controls the ratio of ON and OFF during proportional control. At this moment the term of proportional control for set value is called proportional band
- Setting range : 0 to 100%(Factory default : 0%)

◎ Control period (Proportional control)[t]

- When output the control value by using relay and SSR on the proportional control, it repeats ON for set time and OFF.
- The set time is called proportional control period.
- Setting range : 1 to 120s(Factory default: 10s)

◎ Setting range

- Hysteresis / proportional band / proportional period is set on parameter
- Setting range of hysteresis [HYS] : 1 to 100℃
- Setting range of proportional band [P] : 0 to 100%
- Setting range of control period [t] : 1 to 120sec
- ON/OFF control ↔ Proportional control conversion:When P is 0%, it is ON/OFF control: if there is a value for P, is proportional control. The parameter of hysteresis [HYS] appears when [P], proportional band, is 0%.

◎ Offset correction / Manual reset [rSt]

- When use the proportional control, even when it is stable statue, deviation can occur because of heat capacity and heater capacity. It is called offset.
- Offset is set on the parameter of inner manual reset [rSt].
- Offset correction is used only for proportional control. (Not for [P]=0%). Therefore if proportional band [P] is set as 0%, manual reset parameter [rSt] is not shown.
- Setting range : 0 to 100% (Factory default : 50%)
- Set a value as 50% when PV is equal to SV. After control is stable, if measured temperature is lower than SV, set value is over than 50%, otherwise lower than 50%.
- Controlling a manual reset[rSt] by control result

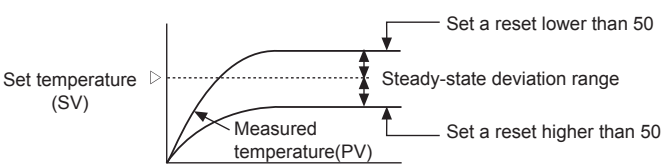

◎ Control mode switch

- User can choose ON/OFF and proportional control.
- **ON/OFF control** - Proportional control conversion:
  When P is 0%, it is ON/OFF control: if there is a value for P, is proportional control.
- Factory default : ON/OFF control(P : 0%)

◎ The conversion of temperature unit(℃ / ℉)[Unt]

- By choosing °C or °F on temperature unit setting parameter, [Unt] conversion is available.
- After choosing a temperature unit, LED is ON.
- Factory default : °C

Autonics

◎ Cooling / Heating operation

- Generally there are two ways to control temperature, one(heat-function) is to heat when PV is getting down(heater). The other(cool-function) is to cool when PV is getting high refrigerator).
- Setting range: HEt (Heat) / CoL (Cool) (factory default : HEt)

◎ Display PV deviation

- It displays the deviation between the PC and the SV.
- When the PV is higher than the SV(PV > SV+2℃), △ is lighted.
- When the PV is lower than the SV(PV < SV-2℃), ▽ is lighted.
- When the deviation of the PV is within ±2℃, □ is lighted.

◎ High/low limit setting for using temperature

- Set a high/low limit of temperature and the set range is within using range.
- If setting a high-limit of temperature on [H.SC], it is a high-limit SV
- If setting a low-limit of temperature on [L.SC], it is a low-limit SV.
- L.SC ≤ SV ≤ H.SC . In case of L.SC = SV = H.SC , the output is OFF.
- If change L.SC and H.SC, the using range and proportional band also are changed.

◎ Error display

- If Error occurs during the operation, error display flashes every 1 sec.

Display	Description
oPn	When the input sensor is not connected or its wire is cut. (Normal operation after connecting a sensor)
LLL	When the measured input temperature is lower than input range of the sensor.
HHH	When the measured input temperature is higher than input range of the sensor.

- When error [oPn] / [HHH] / [LLL] occur
  After the causes of error is solved, it operates normally.
- The priority of 'Error' display : oPn → HHH , LLL

◎ Output setting for error[o.Er]

For error, the statue of output is set by [o.Er] of setting group 2.

- For setting OFF: Output is always OFF for error.
- For setting ON: Output is always ON for error.
- Factory default : OFF

◎ Lock setting[LoC]

- This function limits the change of parameters on each setting group.
  It can be set setting group 2.
- For setting[LC1], changing the parameter, "Setting group 2", is not available.
- For setting[LC2], changing the parameter, "Setting group 1 + Setting group 2", is not available.
- For setting[LC3], changing the parameter, "Setting group 1 + Setting group 2 + SV setting parameter", is not available.
- For setting [oFF], Lock off for all setting group

ООО “РусАвтоматизация”
454010 Россия, Челябинск, Гагарина 5, тел. 8-800-775-09-57 (звонок бесплатный), +7(351)799-54-26,
тел./факс +7(351)211-64-57, info@rusautomation.ru, www.rusautomation.ru, русавтоматизация.рф