RusAutomation **Autonics**

ROTARY ENCODER(ABSOLUTE TYPE)
EP58 SERIES

M A N U A L

CE

Thank you very much for selecting Autonics products.
For your safety, please read the following before using.

■ Caution for your safety

※Please keep these instructions and review them before using this unit.

※Please observe the cautions that follow;
⚠ **Warning** Serious injury may result if instructions are not followed.
⚠ **Caution** Product may be damaged, or injury may result if instructions are not followed.

※The following is an explanation of the symbols used in the operation manual.
⚠Caution:Injury or danger may occur under special conditions.

⚠ Warning

1. **In case of using this unit with machineries(Nuclear power control, medical equipment, vehicle, train, airplane, combustion apparatus, entertainment or safety device etc), it is required to install fail-safe device, or contact us.**
   It may cause a fire, human injury or property loss.

⚠ Caution

1. **Do not drop water or oil on this unit.**
   It may cause damage or miscontrol due to malfunction.
2. **Please observe voltage rating.**
   It may shorten the life cycle or damage to the product.
3. **Please check the polarity of power and wrong wiring.**
   It may cause damage to this unit.
4. **Do not short circuit the load.**
   It may cause damage to this unit.

■ Outline

This is an absolute type encoder producing a unique digital code for eash distinct angle of shaft divided with fixed ratio from the reference point (shaft=0°). Since each angle has its own digital code, electrical factors can barely have influences on encoder's output.Therefore, it features strong noise strength and no memory back required.

■ Features

- ●Shaft diameter ϕ58mm flange type
- ●Diverse front mounting styles available
- ●Various output code(BCD, Binary, Gray code)
- ●Realization of high resolution(720 division, 1024 division)

■ Application

●Precision machine tool ●Fabric machinery ●Robot ●Parking system

■ Ordering information

EP58SC	10	1024	1	R	P	24
Series Diameter ϕ58mm	Shaft diameter	Resolution/ 1revolution	Output code	Rotating direction	Control output	Power supply
SC : Shaft Clamping	10 ϕ10mm	Refer to resolution	1:BCD Code 2:Binary Code 3:Gray Code	F:Output value increases at CW direction R:Output value increases at CCW direction ※Shaft based	P:PNP open collector output N:NPN open collector output	5:5VDC±5% 24:12-24VDC ±5%
SS : Shaft Synchro	6 ϕ6mm					
HB : Built-in	8 ϕ8mm					

※Gray code is optional.

■ Dimensions

◎**EP58SC10**

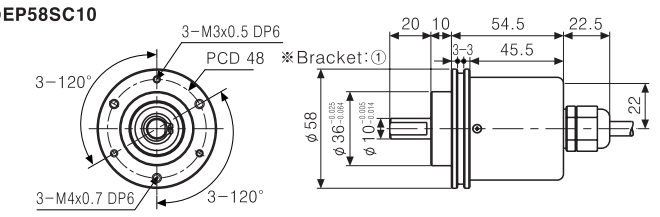

◎**EP58SS6**

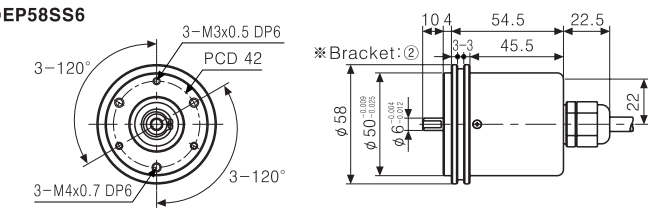

◎**EP58HB8**

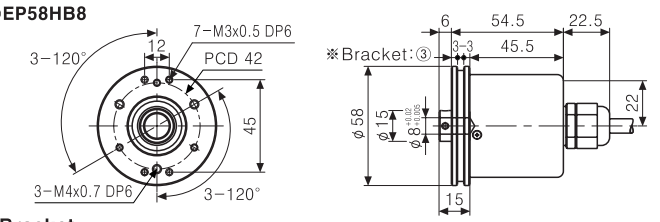

●**Bracket**

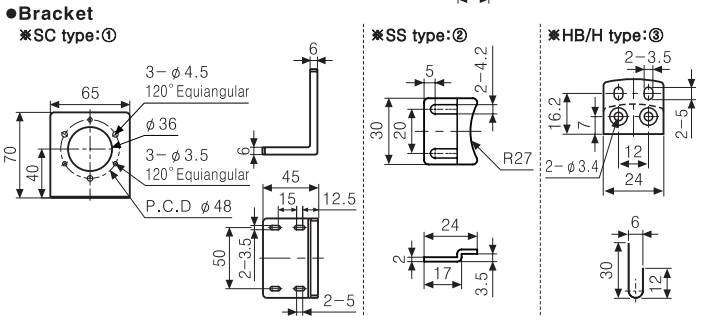

●**Coupling(EP58SC10/EP58SS6 Series)**

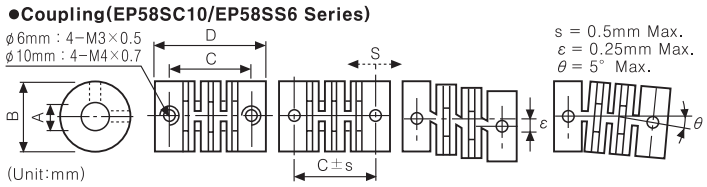

(Unit:mm)

Type \ Item	A	B	C	D
EP58SS6 ϕ6mm	$\phi 6^{+0.1}_{0}$	ϕ15	16.5	22
EP58SC10 ϕ10mm	$\phi 10^{+0.1}_{0}$	ϕ22	18.2	25

※When mounting the coupling to encoder shaft, if there is big eccentricity or bend between rotating encoder shaft and mate shaft, it may cause encoder and coupling's life cycle to shorten.
※Do not load overweight on the shaft.

※The above specifications are subject to change and some models may be discontinued without notice.

■ Speicifications

Type		Diameter ϕ58mm Absolute Rotary Encoder							
Model	PNP open collector output	**EP58□□-□□□□-□□-P-□**							
	NPN open collector output	**EP58□□-□□□□-□□-N-□**							
Resolution		720, 360, 180, 90, 45 division				1024, 512, 256, 128, 64 division			
Electrical specification	Output code		BCD Code	Binary Code	Gray Code		BCD Code	Binary Code	Gray Code
	Output phase/Output angle	720 division	TS:Signal Pulse(11bit) TS:0.5° ±25'	TS:Signal Pulse(10bit) TS:0.5° ±25'	TS:Signal Pulse(10bit) TS:1° ±25'	1024 division	TS:Signal Pulse(13bit) TS:0.3515° ±15'	TS:Signal Pulse(10bit) TS:0.3515° ±15'	TS:Signal Pulse(10bit) TS:0.703° ±15'
		360 division	TS:Signal Pulse(10bit) TS:1° ±25'	TS:Signal Pulse(9bit) TS:1° ±25'	TS:Signal Pulse(9bit) TS:2° ±25'	512 division	TS:Signal Pulse(11bit) TS:0.703° ±15'	TS:Signal Pulse(9bit) TS:0.703° ±15'	TS:Signal Pulse(9bit) TS:1.406° ±15'
		180 division	TS:Signal Pulse(9bit) TS:2° ±25'	TS:Signal Pulse(8bit) TS:2° ±25'	TS:Signal Pulse(8bit) TS:4° ±25'	256 division	TS:Signal Pulse(10bit) TS:1.406° ±15'	TS:Signal Pulse(8bit) TS:1.406° ±15'	TS:Signal Pulse(8bit) TS:2.8125° ±15'
		90 division	TS:Signal Pulse(8bit) TS:4° ±25'	TS:Signal Pulse(7bit) TS:4° ±25'	TS:Signal Pulse(7bit) TS:8° ±25'	128 division	TS : Signal Pulse(9bit) TS : 2.8125° ±15'	TS:Signal Pulse(7bit) TS:2.8125° ±15'	TS:Signal Pulse(7bit) TS:5.625° ±15'
		45 division	TS:Signal Pulse(7bit) TS:8° ±25'	TS:Signal Pulse(6bit) TS:8° ±25'	TS:Signal Pulse(6bit) TS:16° ±25'	64 division	TS : Signal Pulse(7bit) TS : 5.625° ±15'	TS:Signal Pulse(6bit) TS:5.625° ±15'	TS:Signal Pulse(6bit) TS:11.25° ±15'
	Control output: PNP open collector output	Output voltage : Min.(Power supply-1.5VDC), Load current : Max. 32mA							
	Control output: NPN open collector output	Load current : Max. 32mA, Residual voltage : Max. 1VDC							
	Response time(Rising time, Falling time)	Ton=800nsec, Toff=Max. 800nsec(Cable : 2m, I sink = 32mA)							
	Max. Response frequency	35kHz							
	Power supply	●5VDC ±5%(Ripple P-P : Max. 5%) ●12-24VDC ±5%(Ripple P-P : Max. 5%)							
	Current consumption	Max. 100mA(disconnection of the load)							
	Insulation resistance	Min. 100MΩ(at 500VDC mega for all terminals and case)							
	Dielectric strength	750VAC 50/60Hz for 1 minute(all terminals and case)							
	Connection	Cable outgoing type(Cable gland)							
Mechanical specification	Starting torque	●SC/SS type : Max. 40gf • cm(0.004N • m) ●HB type : Max. 90gf • cm(0.009N • m)							
	Moment of inertia	●SC/SS type : Max. 15g • cm² (1.5×10^{-6}kg • m²) ●HB type : Max. 20g • cm² (2.0×10^{-6}kg • m²)							
	Shaft loading	●SC/SS type : Radial : 10kg • f, Thrust : 2.5kg • f ●HB type : Radial : 2kg • f, Thrust : 1kg • f							
	Max. allowable revolution	3000rpm							
Vibration		1.5mm amplitude at frequency of 10 to 55Hz(for one minute cycle) in each of X, Y, Z direction for 2 hours							
Shock		Max. 50G							
Ambient temperature		-10 to 70℃(at non-freezing status), Storage:-25 to 85℃							
Ambient humidity		35 to 85%RH, Storage:35 to 90%RH							
Protection		IP50(IEC standard)							
Cable		ϕ7mm, 15P, Length:2m, Shield cable							
Accessories		ϕ10mm(SC type)/ϕ6mm(SS type) coupling, Fixing bracket							
Unit weight		●Clamping : Approx. 435g ●Synchro : Approx. 415g ●Built-IN : Approx. 410g							
Approval		CE							

■ 360division output waveform(BCD code output) : Representative model

Application model: **EP58□□-360-1□-P-□**

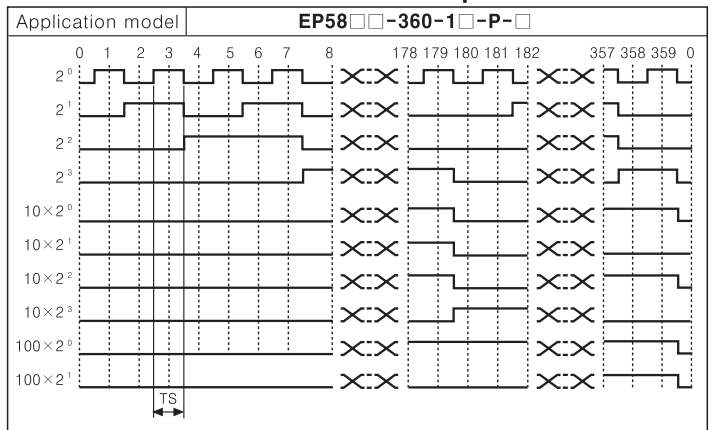

※TS=1° ±25'
※Above waveform is based on the positive logic.
(The output waveform of negative logic is opposed.)

■ 360division output waveform(Binary code output) : Representative model

Application model: **EP58□□-360-2□-P-□**

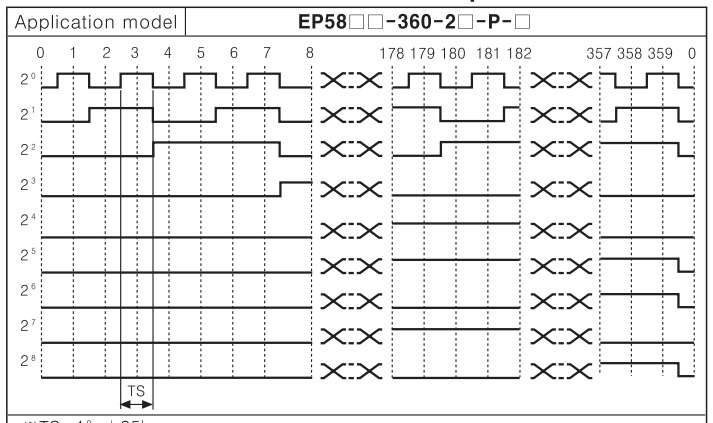

※TS=1° ±25'
※Above waveform is based on the positive logic.
(The output waveform of negative logic is opposed.)

■ 1024division output waveform(BCD code output) : Representative model

Application model: **EP58□□-1024-1□-P-□**

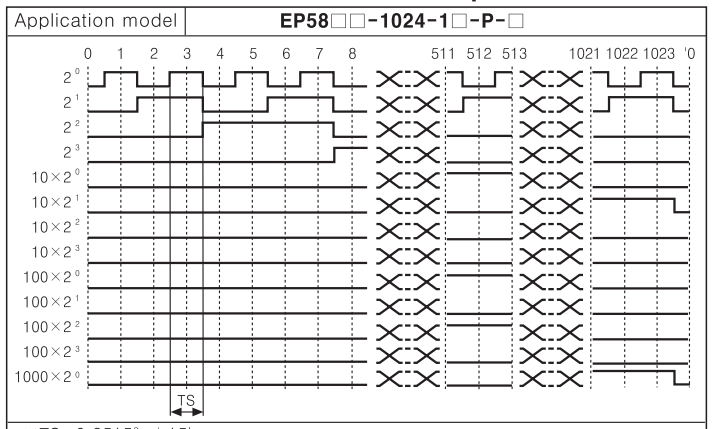

※TS=0.3515° ±15'
※Above waveform is based on the positive logic.
(The output waveform of negative logic is opposed.)

■ 1024division output waveform(Binary code output) : Representative model

Application model: **EP58□□-1024-2□-P-□**

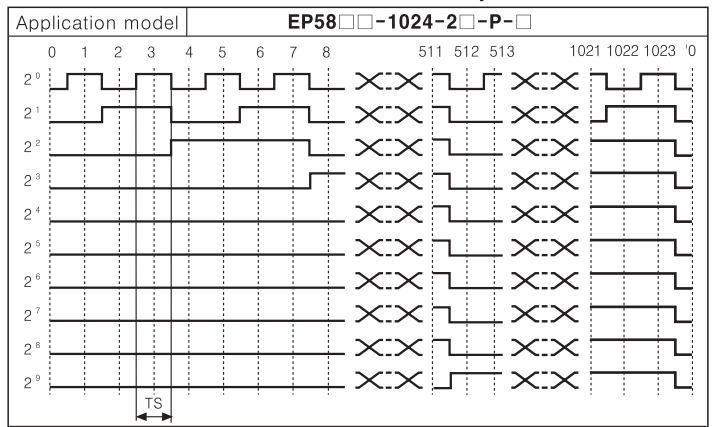

※TS=0.3515° ±15'
※Above waveform is based on the positive logic.
(The output waveform of negative logic is opposed.)

■ Control output circuit

Output type	PNP open collector output		NPN open collector output	
Classification	Encoder circuit	Load connection	Encoder circuit	Load connection
Output circuit	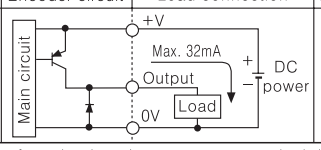		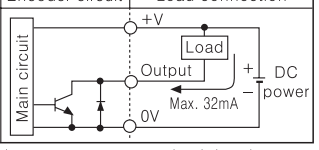	

※In case of overload or short on output terminal, it may cause output circuit break.

■ Connections

●**BCD Code**

Color \ Resolution		45 division	64 division	90 division	128 division	180 division	256 division	360 division	512 division	720 division	1024 division
Power	White	+V									
	Black	GND(0V)									
Output wire	Brown	2^0									
	Red	2^1									
	Orange	2^2									
	Yellow	2^3									
	Blue	($2^0\times10$)									
	Purple	($2^1\times10$)									
	Gray	($2^2\times10$)									
	White/Brown	N.C		($2^3\times10$)							
	White/Red	N.C			($2^0\times100$)						
	White/Orange	N.C				($2^1\times100$)					
	White/Yellow	N.C							($2^2\times100$)		
	White/Blue	N.C									($2^3\times100$)
	White/Purple	N.C									($2^0\times1000$)
	Shield wire	F.G									

●**Binary Code/Gray Code**

Color \ Resolution		45 division	64 division	90 division	128 division	180 division	256 division	360 division	512 division	720 division	1024 division
Power	White	+V									
	Black	GND(0V)									
Output wire	Brown	2^0									
	Red	2^1									
	Orange	2^2									
	Yellow	2^3									
	Blue	2^4									
	Purple	2^5									
	Gray	N.C		2^6							
	White/Brown	N.C				2^7					
	White/Red	N.C						2^8			
	White/Orange	N.C								2^9	
	White/Yellow	N.C									
	White/Blue	N.C									
	White/Purple	N.C									
	Shield wire	F.G									

※Non-using wires must insulated.
※Encoder case and shield wire must be grounded.
※N.C(Not Connected) : Not using.
※Please make sure that short is not occurred when wiring output lines because an exclusive driver IC is used at output circuit.

■ Caution for using

1. Installation
   ①Handle the unit with care since it consists of precision components.
   ②Be careful not to make eccentricity and deflection angle larger, it may shorten the life cycle.
   ③Do not put strong impact when insert coupling into shaft.
   ④Please set Zero-Position with metallic tool for sub-mounting, then use this unit.
2. For using
   ①Please connect shield wire to F.G terminal.
   ②Do not connect and cut circuit during power on, or it may cause damage to the unit.
   ③When use switching power, install the surge absorber on power line and make the wire as short as possible to avoid noise.
3. Environment
   Please do not use this unit with below environment, it may cause malfunction.
   ①Place where this unit or component may be damaged by strong vibration or impact.
   ②Place where there are lots of flammable or corrosive gases.
   ③Place where strong magnet field or electric noise occurs.
   ④Place where is beyond of rating temperature or humidity.
   ⑤Place where strong acids or alkali near by.
4. Vibration and Impact
   ①When the strong impact loads on this unit, it may cause an error.
   ②High resolution encoder can be easily affected by vibration, fix the bracket firmly to install.
   ③Please use metallic coupling when the application needs severe acceleration or deceleration frequently.
5. Wire connection
   ①Do not draw the wire with over strength 30N after wiring.
   ②If wire encoder cable with high voltage line or power cable in the same conduit, it may cause a malfunction or mechanical problem. Please wire it separately or use separated conduit.

※It may cause malfunction if above instructions are not followed.

■ Major products

- ■ Photoelectric sensors
- ■ Fiber optic sensors
- ■ Door sensors
- ■ Door side sensors
- ■ Area sensors
- ■ Proximity sensors
- ■ Pressure sensors
- ■ Rotary encoders
- ■ Connector/Sockets
- ■ Switching mode power supplies
- ■ Control switches/Lamps/Buzzers
- ■ I/O Terminal Blocks & Cables
- ■ Stepper motors/drivers/motion controllers
- ■ Graphic/Logic panels
- ■ Field network devices
- ■ Laser marking system(Fiber, CO_2, Nd:YAG)
- ■ Laser welding/soldering system
- ■ Temperature controllers
- ■ Temperature/Humidity transducers
- ■ SSR/Power controllers
- ■ Counters
- ■ Timers
- ■ Panel meters
- ■ Tachometer/Pulse(Rate)meters
- ■ Display units
- ■ Sensor controllers

RusAutomation
ООО "РусАвтоматизация"
454010 г. Челябинск, ул. Гагарина 5, оф. 507
тел. 8-800-775-09-57 (звонок бесплатный),
тел.: (351)799-54-26, тел./факс (351)211-64-57
info@rusautomation.ru; www.rusautomation.ru
русавтоматизация.рф