ema®

Linking your system

Vibrating Fork Level Switches

The vibrating fork level switch adopts the principle of damping effect and piezo-electric effect of vibrating fork. The sensing part of detection is composed of vibrating fork, a piezo-electric crystal oscillates the forks at their nature frequency, when the fork is effected by damping effect from medium, they will stop virbrating and the drive control circuit will send out signal. This product is suitable for harsh working conditions,they are

IP67 CE SGS RoHS Ex

ООО “РусАвтоматизация”

454010 г. Челябинск, ул. Гагарина 5, оф. 507

тел. 8-800-775-09-57 (звонок бесплатный), +7(351)799-54-26, тел./факс +7(351)211-64-57

info@rusautomation.ru; русавтоматизация.рф; www.rusautomation.ru

Product Features

Vibrating fork level switches

- With Automatic learning function, it can learn different medium density by button without any adjustment
- Metalic structure, sturdy and durable
- The amplitude is large to reach more than 10mm, able to shake off hang-ups and avoid fault
- Ultra bright red LED will provide timely warning on site.
- High range of DC and AC input will not only reduce inventory effectively, but also be used wid.
- Suitable for detect the level of liquid, solid, powder, etc.

Applications

Vibrating fork level switch is suitable for environmental protection,water treatment, electricity,Chemical plastic, pharmacy, fodder, cement, chemical fertilizer, food industry, etc.

Operating Principle

Vibrating fork level switch is suitable for environmental protection,water treatment, electricity,Chemical plastic, pharmacy, fodder, cement, chemical fertilizer, food industrial, etc.

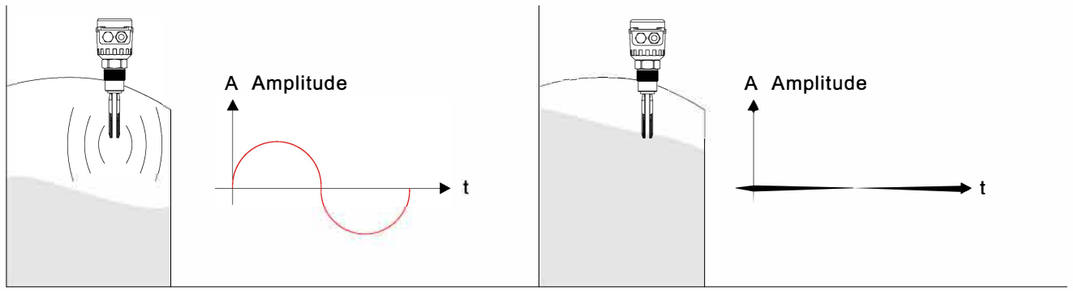

Dimension

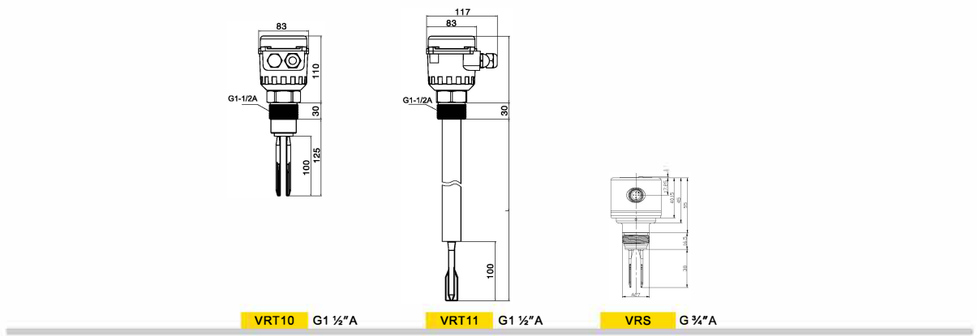

VRT Panel

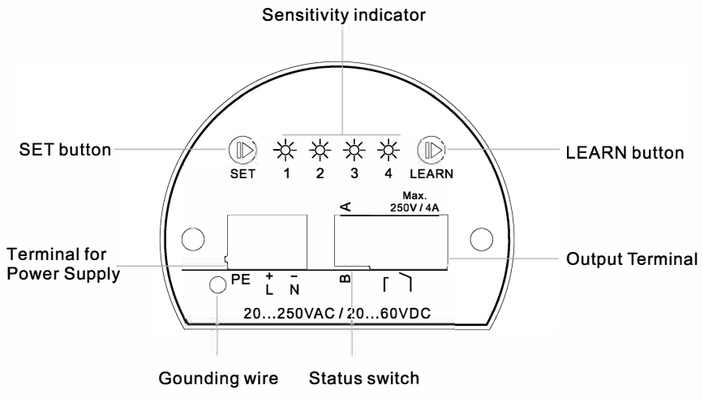

VRT Connection

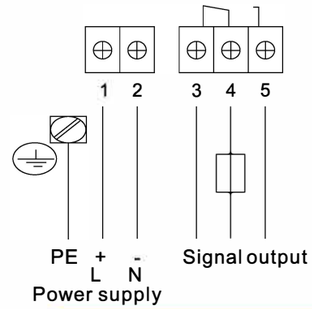

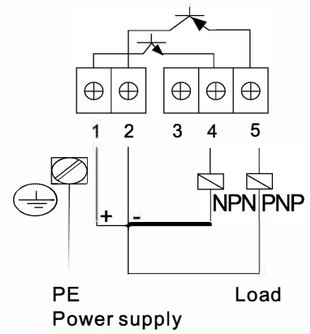

Relay output:		NPN/PNP output:	
Power input	20~250VAC 50~60Hz 20~60VDC	Power input	20~60VDC
Signal output	4A/250VAC Max. 4A/60VDC Max.	Signal output	400mA Max.

Manual of VRT

Unlock:	Hold "SET" button, for 10 sec., until the four LED flash to status of unlock. After unlock, it is back to normal operating mode.
Lock	It is automatically locked if there is no button pressed in 60 sec.
NO/NC Setting	Press DIP switch to set NO or NC.
Learn Mode	Put fork part into the detected medium for 5 sec. and then operate "Unlock". After unlock, hold "LEARN" button for 5 sec., the LED1 ~ LED4 will flash orderly with frequency which is 1 time per sec. to start learning. If the four LEDs are all flash together, this learning is successful; if only the central two LEDs shine, this learning is failed and it is required to learn again.
Sensitivity Setting	Under status of unlock, press "SET" button to set sensitivity with checking the flash of LED1 to LED4. Sensitivity is from high to low by LED1 to LED4.

Notice:

1. The learning function of this type is not only to overcome the condition of the vibration absorption after the installation on the wall of tank but also to avoid of false operation caused by noise interference.
2. factory setting is based on the density of water (1g/cm3). When the density of detected object is higher than or equal to 1g/cm3, it can be used normally without setting learning function. Otherwise it needs to reset learning function when the density of detected object is lower than 1g/cm3.
3. Sensitivity is set as the highest value in the factory and suitable to be used under the stable wave of medium. If the wave of medium fluctuates bigger, it is required to lower the sensitivity to avoid any error in warning.
4. During installation, please try to avoid a significant shock position to prevent false alarm, if this can not be avoided, please re-learning at the installed location, or reset to the factory settings

Output of VRT Switch2

Switch2	A	B
Relay OUT	3 4 5	3 4 5
NPN OUT	1 4	1 4
PNP OUT	2 5	2 5
Indicator	⊗	✳

VRS

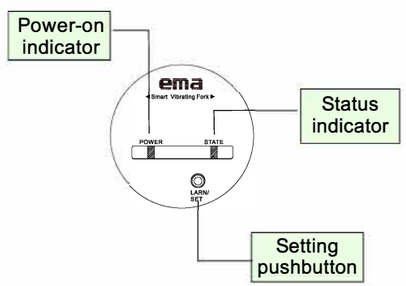

Figure. A

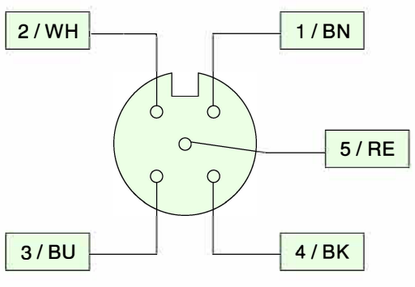

Figure. B

Manual of VRS

Unlock	"SET" button for 10 secs until alternate red and green lights flash. The unit unlocks and returns to the operation mode. The red and green light stop
Lock	It is automatically locked when there is no operation within 60 secs.
NO / NC setting	Under the unlock condition, hold "SET" button for 3 secs and then the alternate red and green lights flash. When the green LED flashes, release the button to enter NO / NC setting mode and then press "SET" button once to adjust the required status.
Learning mode	Put the fork part into the detected medium with stability for 5 secs. Under the unlock condition, hold "SET" button for 3 secs and then the alternate red and green lights flash. When the red LED flashes, release the button. The red LED flashes once in a second orderly to express the status of waiting for learning. The red LED flashes and goes out twice to express the status of learning. The learning setting is successfully finished when the alternate red and green lights flash quickly. Otherwise, the red and green light flashes together and the user has to set the learning function again. To reset the learning, just press "SET" button again to enter second learning mode. Notice: To enter the second learning mode, please press "SET" button in 3 sec. after first learning finished. Otherwise the user shall be required to process the whole learning mode again to reset the setting. This function is to avoid of the false operation.

Notice:

1. The learning function of this type is not only to overcome the condition of the vibration absorption after the installation on the wall of tank but also to avoid of false operation caused by noise interference.
2. factory setting is based on the density of water (1g/cm3). When the density of detected object is higher than or equal to 1g/cm3, it can be used normally without setting learning function. Otherwise it needs to reset learning function when the density of detected object is lower than 1g/cm3.

Status Indicators of VRS

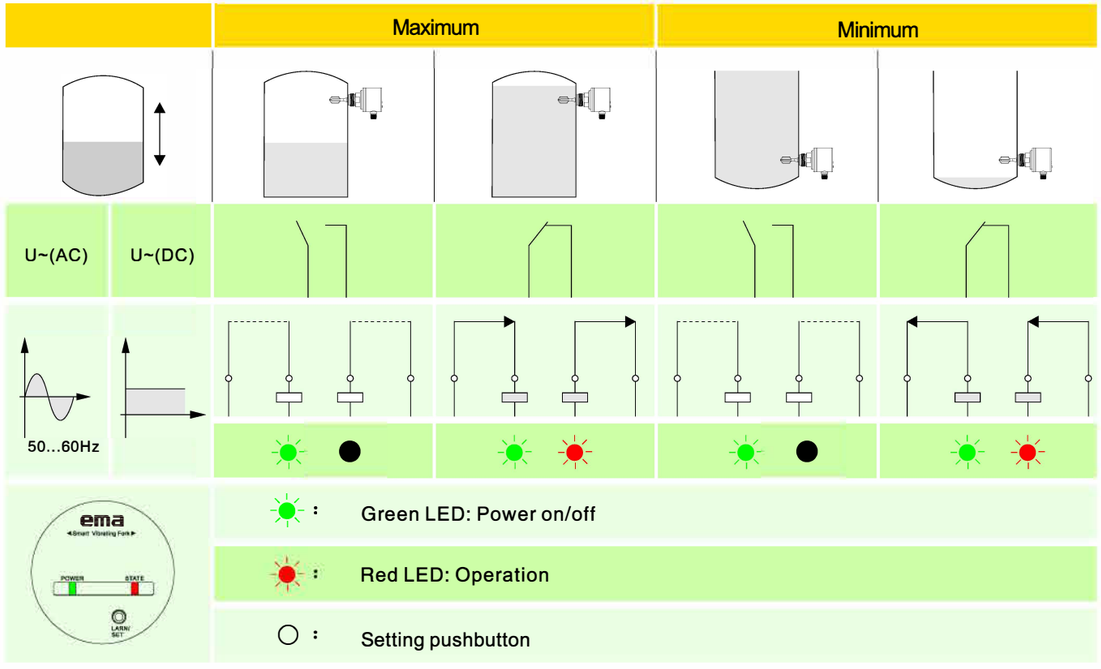

Dimensions(mm)	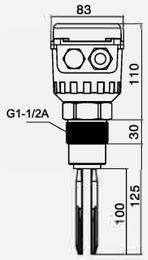	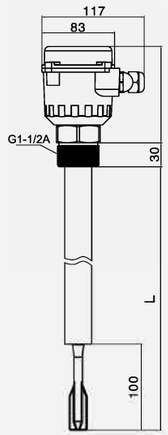
Model	**VRT10**	**VRT11**
Type	Standard	Extension
Connection	G1 ½"A	G1 ½" A
Cable entrance	M20 × P1.5	
Detecting medium	Liquid/Powder/Solid	
Applications	Suitable for all powder, solid and liquid through learning function	
Voltage	20~ 60VDC 20~250VAC 50/60Hz	
Response Time(s)	< 3	
Ambient temperature(℃)	–40…+70	
Storage temperature(℃)	–40…+85	
Medium temperature(℃)	–40…+150	
Opeating pressure(bar)	–1…+40	
House material	Aluminium alloy	
Fork material	Stainless steel 316L	
Output	PNP/NPN 400mA Max.	
Consumption	DC 3W Max AC 15W Max	
Standard Length(mm)	125	1200MAX
Protection classification	IP67	

Dimensions(mm)	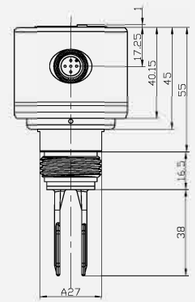	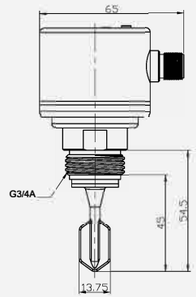
Model	**VRS**	
Type	Small	
Connection	G¾"A	
Cable entrance	M12x1.5	
Detecting medium	Liquid/Powder/Solid	
Applications	Suitable for all powder, solid and liquid through learning function	
Voltage	18~36VDC	
Response Time(s)	< 3	
Ambient temperature(℃)	–40…+70	
Storage temperature(℃)	–40…+85	
Medium temperature(℃)	- 40…+120	
Opeating pressure(bar)	–1…+40	
House material	Stainless Stell 316L	
Fork material	Stainless steel 316L	
Output	PNP/NPN 200mA Max.	
Consumption	<1W Max	
Standard Length(mm)	45	
Protection classification	IP68	

Dimensions(mm)

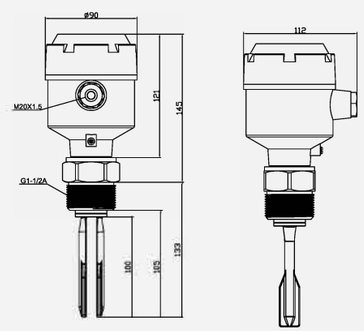

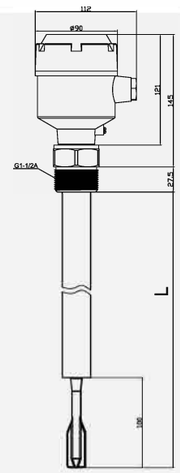

Model	VRE10	VRE11
Type	EX Standard	EX Extension
Connection	G1 ½" A	
Cable entrance	G1 ½" A	
Detecting medium	Liquid/Powder/Solid	
Applications	Suitable for all powder, solid and liquid through learning function	
Voltage	A:20~60VDC & 20~250VAC,50~60Hz (Relay output SPDT 4A/250VAC 4A/60VAC B: 20~60VDC(NPN/PNP)	
Response Time(s)	< 3	
Medium density	Auto-learning setting by pushbuttons	
Consumption	DC 3W Max AC 15W Max	
Sensitivity	4 levle adjustable	
Opeating pressure(bar)	–1…+40	
House material	Aluminium alloy	
Fork material	Stainless steel 316L	
Output	PNP/NPN 400mA Max.	
Standard Length(mm)	105	1200MAX
Protection classification	IP54	
Protection classification	EXd II CT6	

Order Information

VR	T	10	A	A	0125	6
Series	Housing material	Type	Connection	Power Supply	Length of fork	Fork Material

VR	Smart Vibrating Level Switches Series		
T	Housing material T: Aluminum		
10	Type 10: Standard VRT10	11	Type 11: Extension VRT11
A	Process connection A: G1 ½"A		
A	Power supply / Output A: 20-60VDC & 20-250VAC, Relay output SPDT 4A/250VAC or 4A/60VAC, 50/60Hz B: 20-60VDC, NPN & PNP output, 50/60Hz		
0125	Fork Length (mm) 0125: L = 125 mm	0200	Extension Length (mm) 0200: L = 200 mm 0400: L = 400 mm 0600: L = 600 mm 0800: L = 800 mm 1000: L = 1000 mm 1200: L = 1200 mm
6	Fork material 6: Stainless Steel 316L		

Notice:
The total length tolerance is within ±5mm

Order Information

VR	S	10	A	A	0045	6
Series	Housing material	Type	Connection	Power Supply	Length of main shaft	Shaft Material

VR	Smart Vibrating Level Switches		
S	Housing material S: Stainless steel 316L		
10	Type 10: Small fork VRS10	20	Type 20: Sanitary VRS20
A	Process connection A: G 3/4 "A		
A	Power supply / Output A: 18-36VDC Relay output B: 18-36VDC, NPN & PNP		
0045	Fork Length (mm) 0045: Small fork L = 45 mm		
6	Fork material 6: Stainless Steel 316L		

Order Information

VR	E	10	A	A	0105	6
Series	Housing material	Type	Connection	Power Supply	Length of fork	Fork Material

VR	Smart Vibrating Level Switches Series		
E	Housing materia E: EX proof		
10	Type 10: Standard VRE10	11	Type 11: Extension VRE11
A	Process connection A: G1½"A		
A	Power supply / Output A: 20-60VDC & 20-250VAC, Relay output SPDT 4A/250VAC or 4A/60VAC, 50/60Hz B: 20-60VDC, NPN & PNP output, 50/60Hz		
0105	Fork Length (mm) 0105: L = 105 mm	0200	Extension Length (mm) 0200: L = 200 mm 0400: L = 400 mm 0600: L = 600 mm 0800: L = 800 mm 1000: L = 1000 mm 1200: L = 1200 mm
6	Fork material 6: Stainless Steel 316L		

Accessories

Cable	Connector Order NO.(Only for VRS)						Drawing
 L	C	02	L	5	C	12	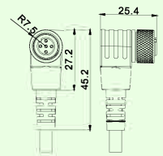
	C: Cable	Length 02: 2M 05: 5M 10: 10M	Connector L: Angled	Pole 5 : 5	Material R:PUR C:PVC S:PVC Shielded wire	Size 12 : M12	

Type	Flange	Order No.	Drawing
VRT		S4F0	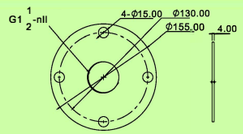

Type	Fixture	Order No.	Drawing
VRT		S0C0	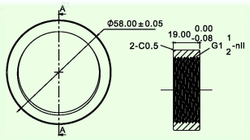

Installation Of VRT

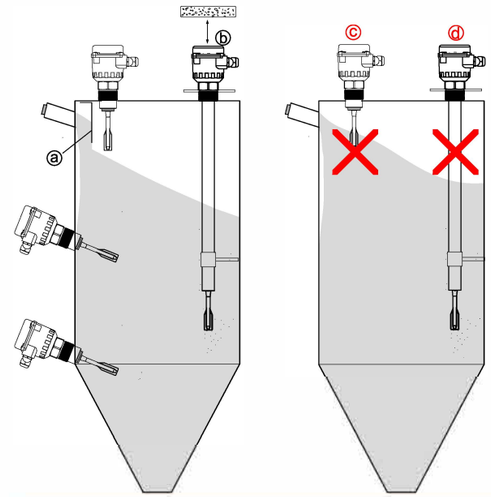

Correct mounting:

ⓐ Next to the silo wall, but with enough distance from it and from material build-up, or shield to protect against flowing material.

ⓑ Sufficient space for mounting and for adjusting.Avoid of the false warming from material flow.Protective hood against condensation in the housing.

Incorrect mounting:

ⓒ Too close to the wall and material build-up.

ⓓ In filling curtain.

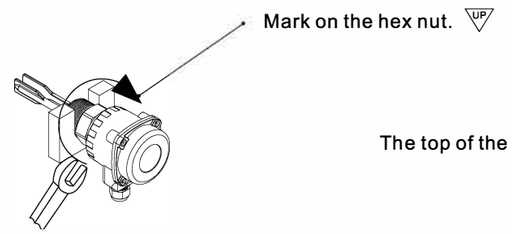

The top of the fork is marked.

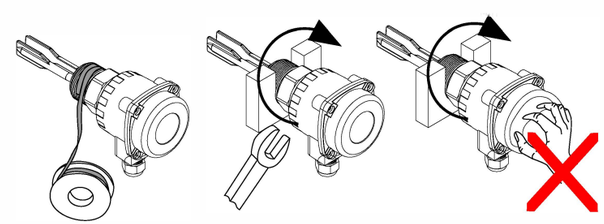

Enclosed by PTFE thread seal tape.

Tightened by a wrench.

Not wrested by hands.

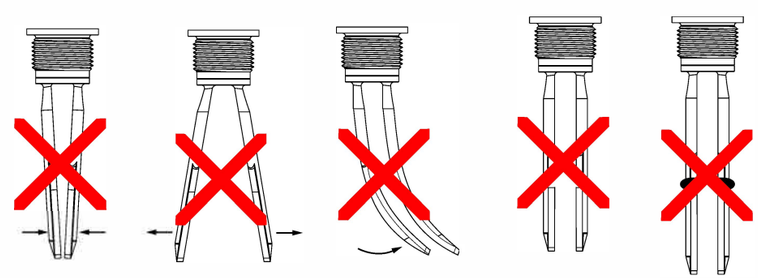

Do not:
damage the fork;
bend the fork;
shorten the fork;
and lengthen the fork.

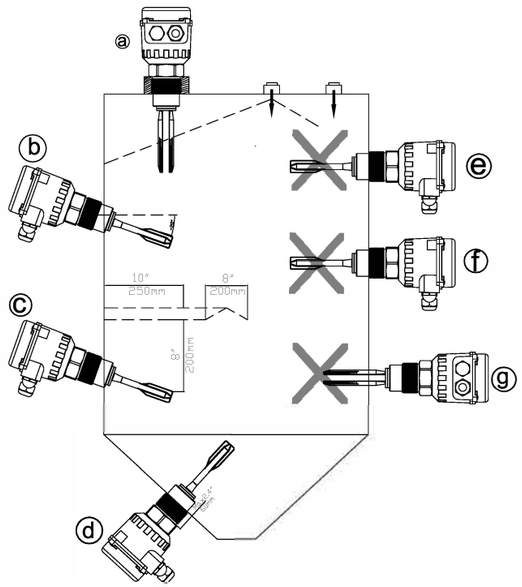

1.The ideal installation for reducing the shock to materials and the hanging of materials is to make the switch horizontal at an angle of 15-20.
2.Keep the switches away from the feed opening of the barrel to reduce the shock to materials, if unavoidable, a protection plate is necessary.
3.The inlet of the connection box should be downward and the fixing nuts of power line must be tightened.
4.The operators cannot use vibration rod to climb or hook any object when working within the barrel.

Correct mounting:
ⓐ Top-mounted, Fork is vertical towards bottom and mounted in any position far away from the feed opening of top side.
ⓑ Laterally mounted,Fork angled slightly downwards by 15~20 degree so as to reduce the shock and the hanging of the flowing materials.
ⓒ Laterally mounted with shield,With a shield, length approx.10 in(250mm),width approx.8 in(200m),folk angled slightly downwards by 15~20 degree so as to reduce the shock of the flowing materials and prevent the improper stock from itself.

Incorrect mounting:
ⓓ In discharge hopper,Max. nozzle length 2.4 in (60mm),so that no build-up occurs which prevents the fork from oscillating. Laterally mounted in filling curtain or under the feed opening. Incorrect fork orientation
ⓔ The surface of fork is subjected to high load caused by discharging material;
ⓕ It may cause false function due to residual material.
ⓖ The switch will not work normally when the distance of mounting nozzle and barrel is over 2.4"(60mm).

VRS Installation

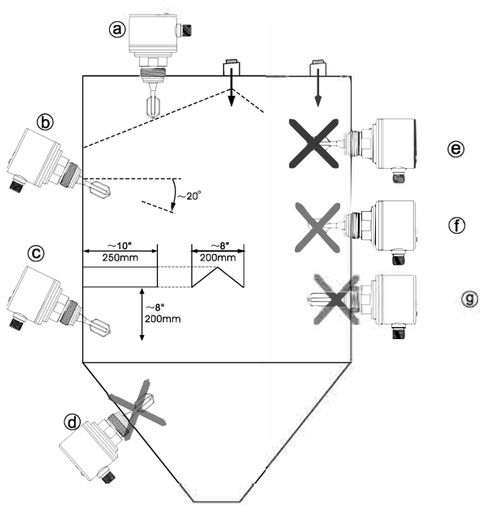

1.The ideal installation for reducing the shock to materials and the hanging of materials is to make the switch horizontal at an angle of 15-20.
2.Keep the switches away from the feed opening of the barrel to reduce the shock to materials, if unavoidable, a protection plate is necessary.
3.The inlet of the connection box should be downward and the fixing nuts of power line must be tightened.
4.The operators can not use vibration rod to climb or hook any object when working within the barrel.

Correct mounting:
ⓐ Top-mounted, Fork is vertical towards bottom and mounted in any position far away from the feed opening of top side.
ⓑ Laterally mounted,Fork angled slightly downwards by 15~20 degree so as to reduce the shock and the hanging of the flowing materials.
ⓒ Laterally mounted with shield,With a shield, length approx.10 in(250mm),width approx.8 in(200m),folk angled slightly downwards by 15~20 degree so as to reduce the shock of the flowing materials and prevent the improper stock from itself.

Incorrect mounting:
ⓓ In discharge hopper,Max. nozzle length 2.4 in (60mm),so that no build-up occurs which prevents the fork from oscillating.
ⓔ Laterally mounted in filling curtain or under the feed opening.
ⓕ Incorrect fork orientation, The surface of fork is subjected to high load caused by discharging material, It may cause false function due to residual material.
ⓖ The switch will not work normally when the distance of mounting nozzle and barrel is over 2.4"(60mm).

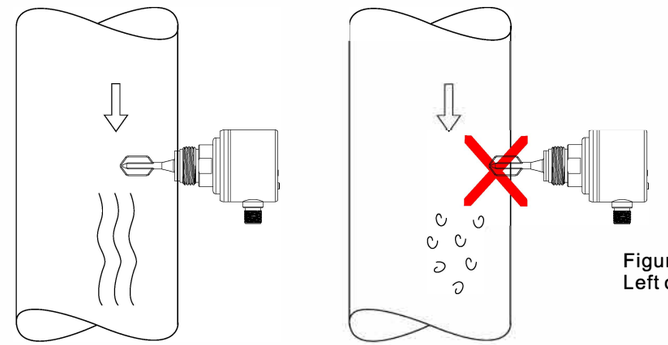

Figure: Mounting of VRS into the pipe.
Left one is correct, but Right one is incorret.

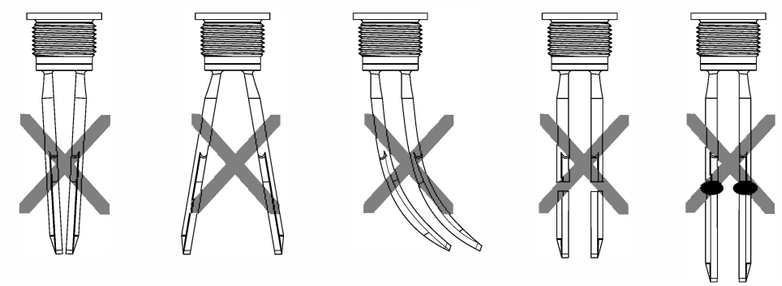

Do not:
damage the fork; bend the fork; shorten the fork; and lengthen the fork.

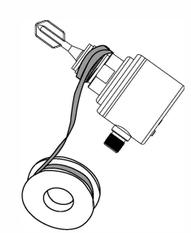

Enclosed by PTFE thread seal tape.

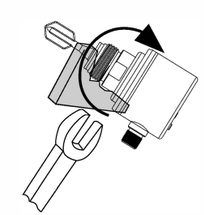

Tightened by a wrench.

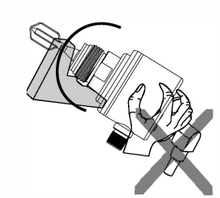

Not wrested by hands.